Ingeniería Electrónica

SMART IDENT

TAM-1000

TICKET ACCOUNT MACHINE

WITH PRINTER

Specifications

User Manual

TAM1000.UM.C.EN.doc

REVISION HISTORY

No	Date	Description	Revision	Page
1	2012.12.	First Edition	A	44
2	2014.09	“M3D” and “M3E” Commands are added	B	45
3	2016.10	USB communication option is added. Model Name Information is modified	C	46

MODEL NAME INFORMATION

T A M - 1 □ □ □ □ □

Interface	MS Ticket	MS Ticket Track	Option I	Option II	Option II
RS232C	0 : - 1 : MS Read/Write with Printer 2 : MS Read/Write without Printer	0 : Without Magnetic 1 : ISO 1 Track 2 : ISO 2 Track 3 : ISO 3 Track 4 : ISO 1,2 Track 5 : ISO 1,3 Track 6 : ISO 2,3 Track 7 : ISO 1,2,3 Track	0: Without bezel 1: LOW-CO Short bezel 2: HI-CO Short bezel 6: Short Bezel 7: LOW-CO Without Bezel 8: HI-CO Without Bezel	0: Without Case & without capture function 1: Without Case & with capture function 2: With Case & without capture function 3: With Case & with capture function	0 : - 1 : MS Read Only

C O N T E N T S

System Block Diagram ---------- 5

Specification ---------- 8

Magnetic Ticket Process ---------- 11

Communication Interface ---------- 12

Technical Drawing ---------- 19

Command Detail ---------- 23

Error Detail ---------- 43

Precautions ---------- 46

SYSTEM BLOCK DIAGRAM

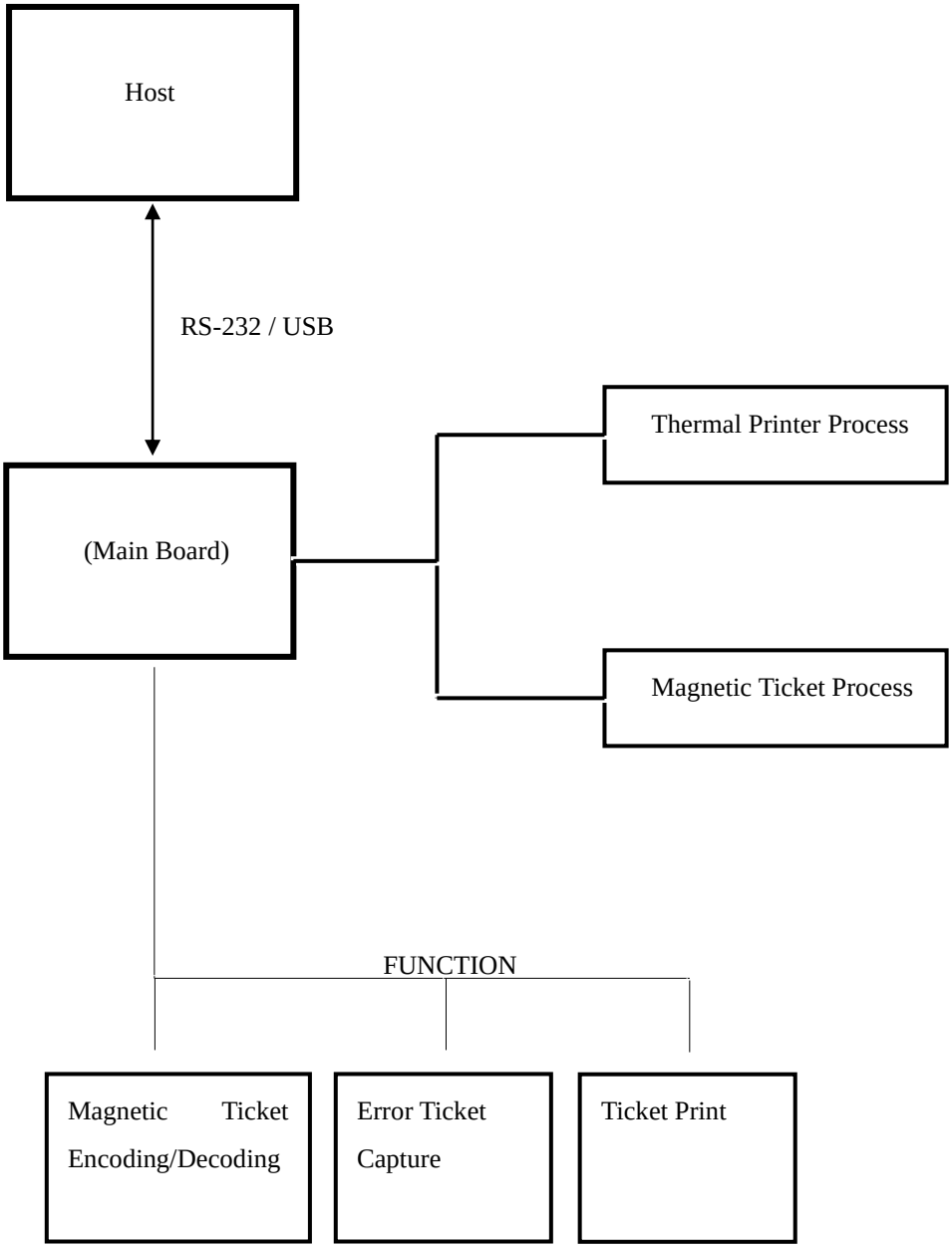

♦ *RS – 232 Connection*

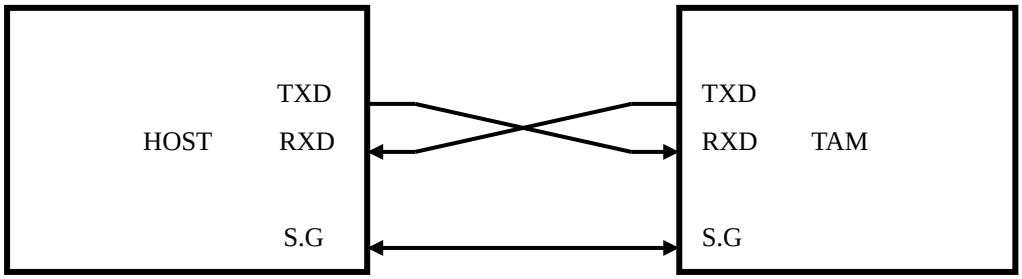

Part Number : RED-9S-LNA(HIROSE)

Pin No	INDEX	Remark
2	RXD	Receive
3	TXD	Transmit
5	S.G	Signal Ground

♦ USB Interface.

*** USB B TYPE CONNECTOR.**

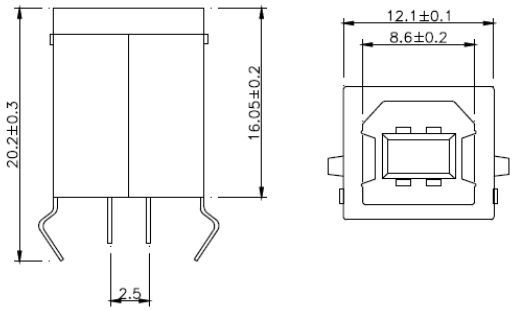

♦ *Power Connection*

TAM-11XX

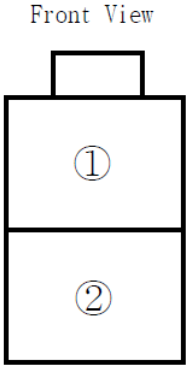

Main B/D side (Male, Part Number : 5566-02A, Molex), Cable Length: 500 mm

Pin NO	Signal Name	Cable color	Direction
1	GND(+24V)	Black	Input
2	+24V	Yellow	

TAM-12XX

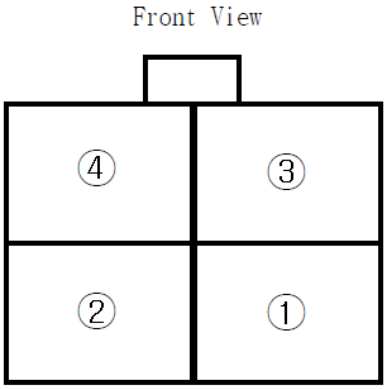

Main B/D side (Male, Part Number : 5569-04A2, Molex), Cable Length: 500 mm

Pin NO	Signal Name	Cable color	Direction
1	GND(+24V)	Black	Input
2	Non-use		
3	+24V	Yellow	
4	Non-use		

SPECIFICATIONS

♦ *basic functions*

Item	Sub Item	Spec
Print	Print Method	Direct Thermal
	Print Speed	50 mS/1Line
	Thermal Printer	Resolution : 200 dpi(8 dpm)
		Abrasion resistance: 50 Km
Encoding /Decoding module	Magnetic	MS Encoding method : F2F
		Coercivity: Low-Co and High-Co
Ticket	Dimension	86mm(L) x 54mm(W) x 0.18 ~ 0.22 mm(T)
	Type	Paper ticket with Thermal Writable Coating
Feeding Method	Motor	Step Motor
	Card Feeding Speed	About 350 mm/S
Interface		RS-232C, USB
Unit dimension		TAM-11XX: 115.4(W) x 303.9(L) x 113.7(H) TAM-12XX: 115.4(W) x 178.5(L) x 107.5(H)
Input power		TAM-11XX: DC +24V, 4A. TAM-12XX: DC +24V, 2.5A.
Weight		TAM-11XX: 2.8 Kg. TAM-12XX: 2 Kg.

♦ *Environment Requirements*

Ambient Temperature

Storage : -20 °C to 60 °C

Operating : 5 °C to 50°C

Ambient Relative Humidity

Storage : 10% to 90% RH

Operating : 20 % 85% RH

Vibration

: Amplitude 2mm, 10 to 30 Hz in X, Y, Z directions for 30min, 2G or less

Shock Endurance : 30G, 11ms

♦ *Controller Environment*

Communication

: RS232C Interface

: Baud Rate – 19200 BPS

– 38400BPS(Default)

– 57600BPS

– 115200BPS

: 8Data bit, 1 Start bit, None Parity bit, 1 Stop Bit

CPU : STM32F103 VCT6 Z

RAM : 48K byte

Flash ROM: 256K byte

RTC

♦ *Dip Switch setting*

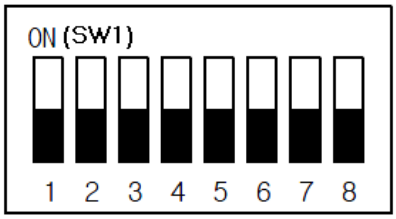

Communication Type Setting

Pin No. 3	Communication Type	Note
OFF	UART	Default
ON	USB	

Baud Rate Setting

Pin No. 7	Pin No. 8	Baud Rate	Note
OFF	OFF	19200 BPS	
OFF	ON	38400 BPS	Default
ON	OFF	57600 BPS	
ON	ON	115200 BPS	

MAGNETIC TICKET PROCESS

TAM series is able to decode data on all three tracks of ISO 1,2 and 3 in one pass, which makes read process time shorter. And it is a basic and standard option to read and write to both Low – Co and High-Co Ticket.

♦ *Life and Reliability*

Life of Head (Long Life head): Approximately 3,000,000 passes

(One pass is for forward or backward movement)

Error Rate : 5/1000 cycle

♦ *Recording*

	Track 1	Track 2	Track 3
BPI	210	70	210
Capacity	Max 79	Max 39	Max 107
Reading Methods	F2F		
Length	Variable		
Ticket thickness	paper ticket: 0.17 ~ 0.22mm		

COMMUNICATION INTERFACE

♦ *Communication Method*

Asynchronous, Half duplex.

Baud Rate : 19200 – 115200Bps , Default : 38400Bps

Start Bit : 1Bit

Data Length : 8Bit

Parity : None

Stop Bit : 1Bit

♦ *Communication Protocol Format*

1 Command Frame Format.

SOH	Null	Length	STX	CMD	DATA	ETX	BCC
1 byte	1 byte	2 byte	1 byte	3 byte	N byte	1 byte	1 byte

2 Positive Response Frame Format

SOH	Null	Length	STX	CMD	GOOD	0x01	DATA	ETX	BCC
1 byte	1 byte	2 byte	1 byte	3 byte	2 byte	1 byte	N byte	1 byte	1 byte

(N byte: variable length)

3 Negative Response Frame Format

SOH	Null	Length	STX	CMD	E-Code	0x00	ETX	BCC
1 byte	1 byte	2 byte	1 byte	3 byte	2 byte	1 byte	1 byte	1 byte

4 BCC (Check Sum)

SOH	Null	Length	STX	CMD	DATA	ETX	BCC

BCC (Check Sum)

Command Frame BCC = Null ^ Length ^ STX ^ CMD ^ DATA ^ ETX.

Positive Response BCC = Null ^ Length ^ STX ^ CMD ^ GOOD ^ 0x01 ^ DATA ^ ETX.

Negative Response BCC = Null ^ Length ^ STX ^ CMD ^ E-Code ^ ETX.

5. Explanatory note of technical words

Name	Detail
Null	Always 0x00.
Length	Data Length from the CMD to DATA.
CMD	Instruction Code (3 Bytes)
GOOD	Normal Execution : 0x0000 (2 Bytes)
E-Code	Command Failed: Refer to “Error Code” (2 Bytes)
BCC	Check Sum.

<Length>, <E-Code>

High Byte	Low Byte

6. Control Characters

Name	Hex Value	Detail
SOH	0x01	Start of Header
STX	0x02	Start of Text
ETX	0x03	End of Text
ENQ	0x05	Enquiry
ACK	0x06	Positive Acknowledge
NAK	0x15	Negative Acknowledge
CAN	0x18	Cancel

7 COMMUNICATION SEQUENCE / TIMING

7.1 Command

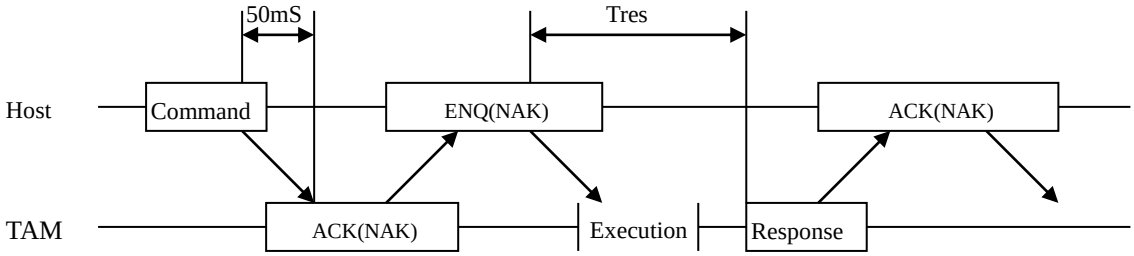

7.2 Inquiry

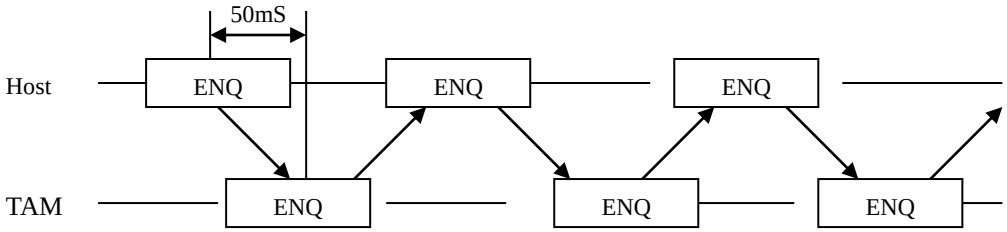

7.3 Sequence

7.3.1 General

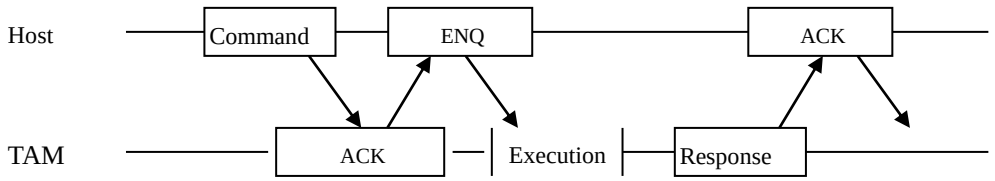

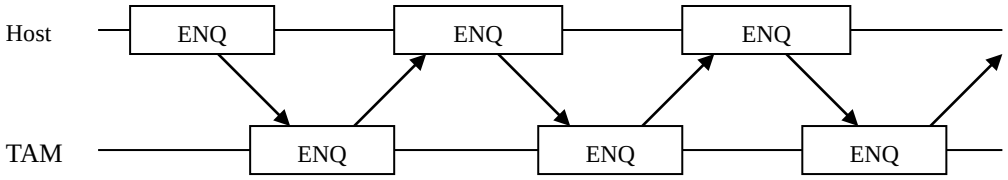

7.3.2 Event

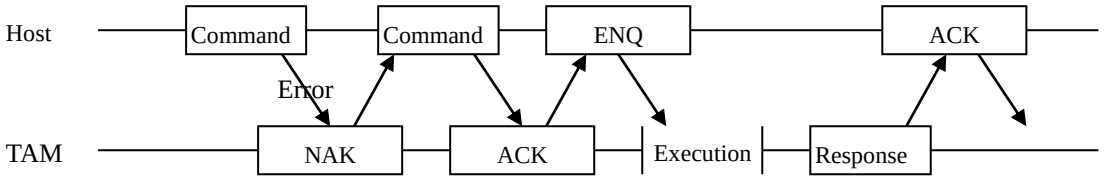

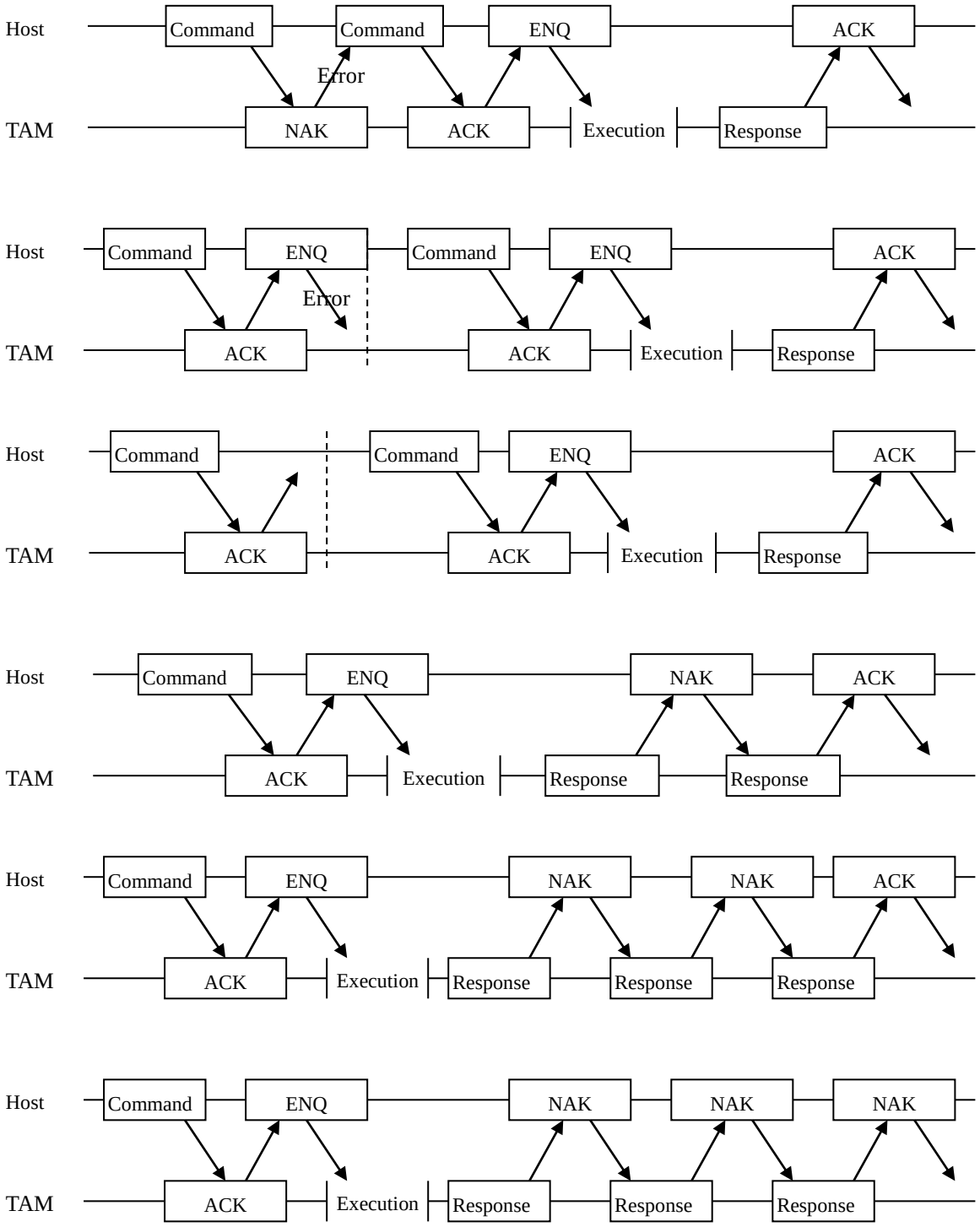
Host
TAM
Command
Command
ENQ
ACK
Error
NAK
ACK
Execution
Response
Command
ENQ
Command
ENQ
ACK
Error
ACK
ACK
Execution
Response
Command
Command
ENQ
ACK
ACK
ACK
Execution
Response
Command
ENQ
NAK
ACK
ACK
Execution
Response
Response
Command
ENQ
NAK
NAK
ACK
ACK
Execution
Response
Response
Response
Command
ENQ
NAK
NAK
NAK
ACK
Execution
Response
Response
Response

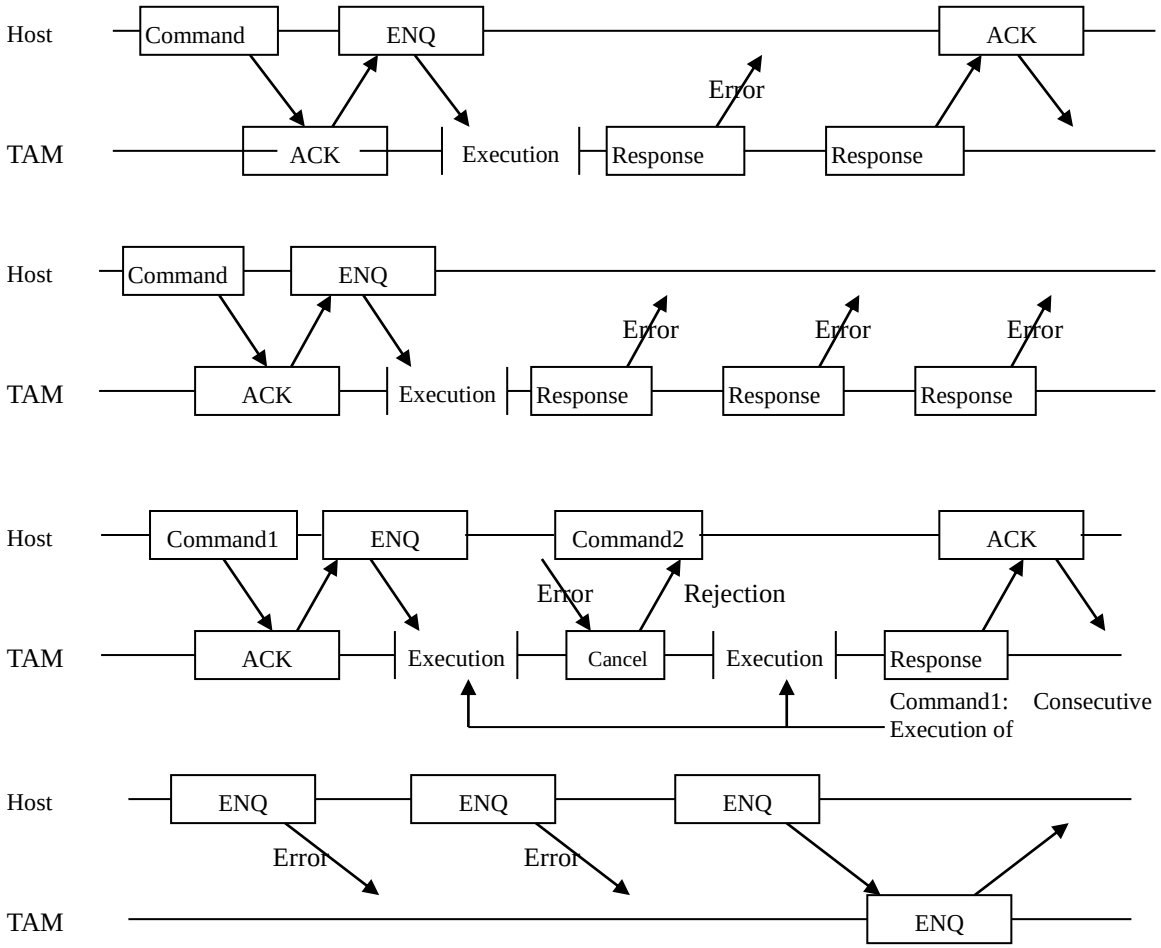
Host
Command
ENQ
ACK
Error
TAM
ACK
Execution
Response
Response
Host
Command
ENQ
Error
Error
Error
TAM
ACK
Execution
Response
Response
Response
Host
Command1
ENQ
Command2
ACK
Error
Rejection
TAM
ACK
Execution
Cancel
Execution
Response
Command1: Consecutive
Execution of
Host
ENQ
ENQ
ENQ
Error
Error
TAM
ENQ

- When received the NAK packet consecutively.

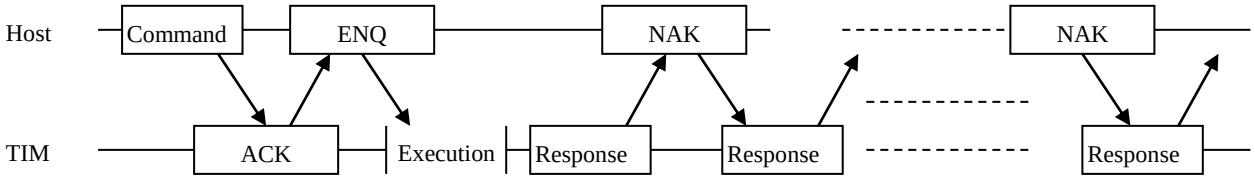

- When the Host sends the command without the ACK packet.

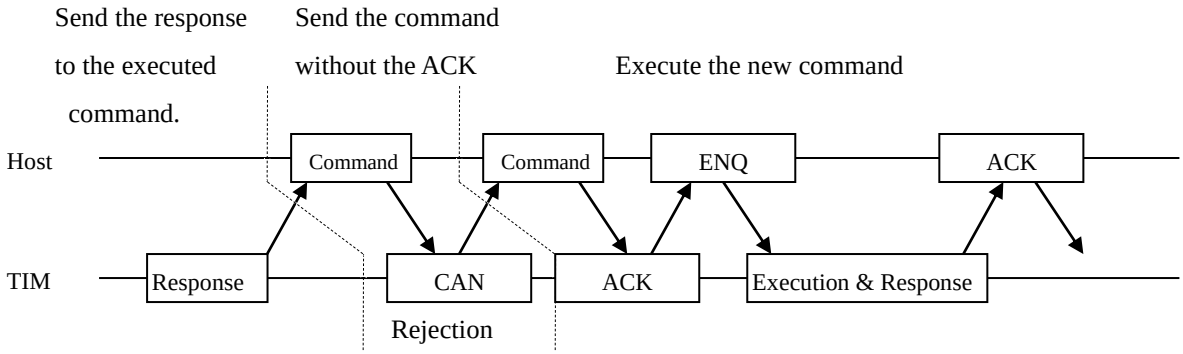

The terminal should ignore the command received before it sends the ACK packet, send the CANCEL packet. The second command will be treated as the ACK packet and executed with no ACK.

TECHNICAL DRAWING(TAM-11XX, Without Case)

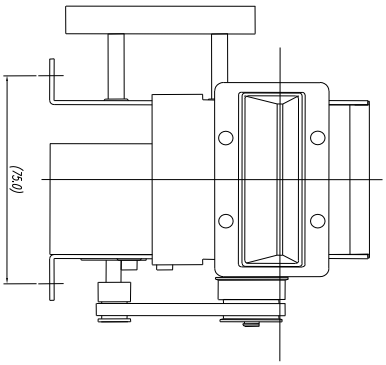

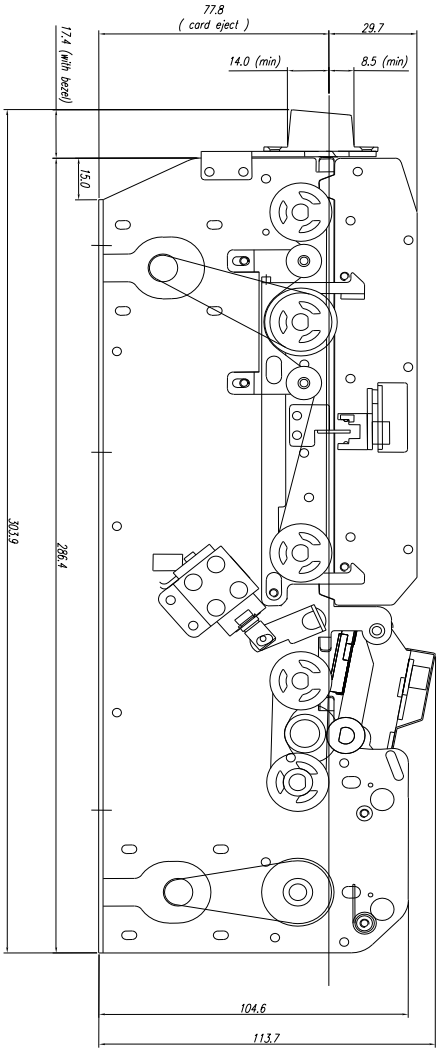

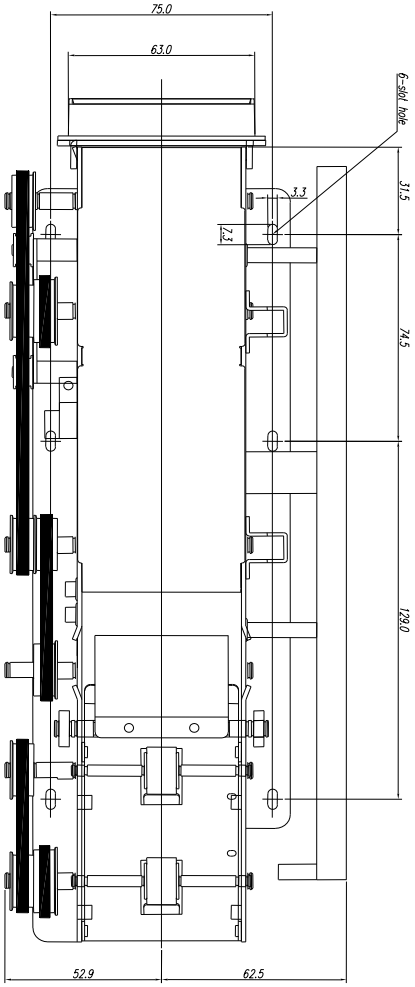

TECHNICAL DRAWING(TAM-11XX, With Case)

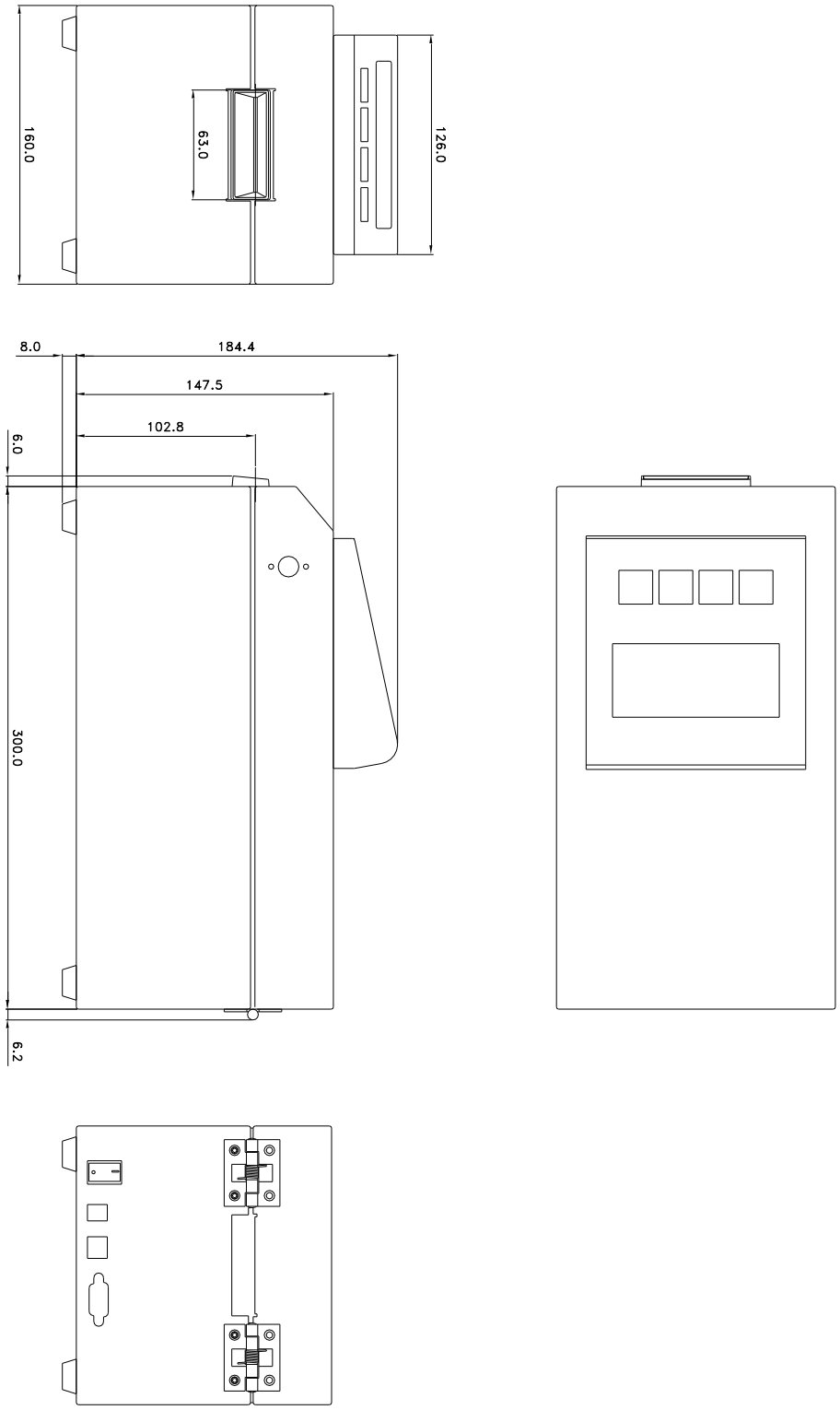

TECHNICAL DRAWING(TAM-12XX)

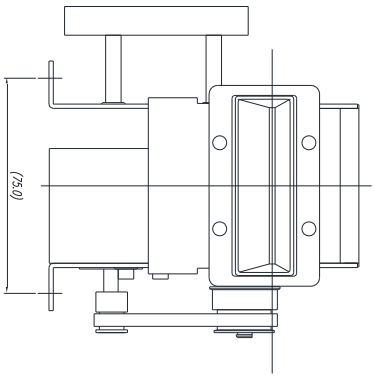

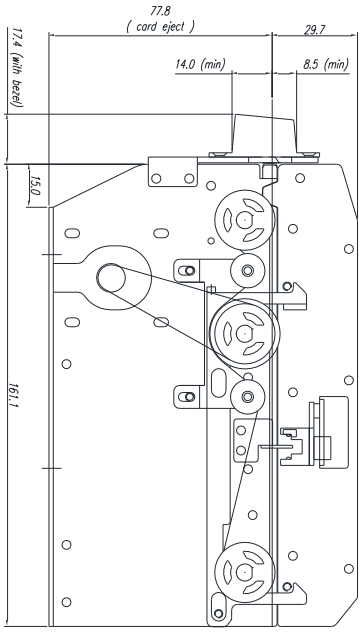

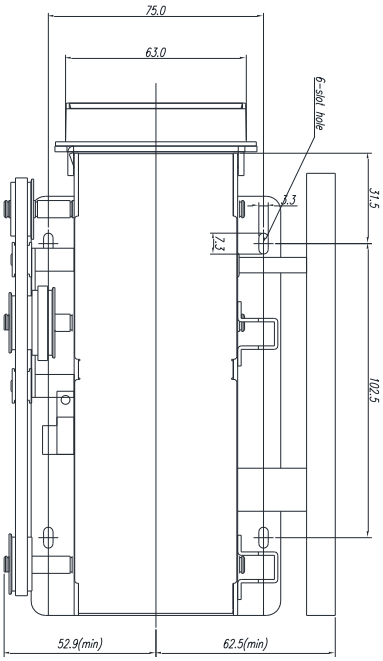

<Sensor positions>

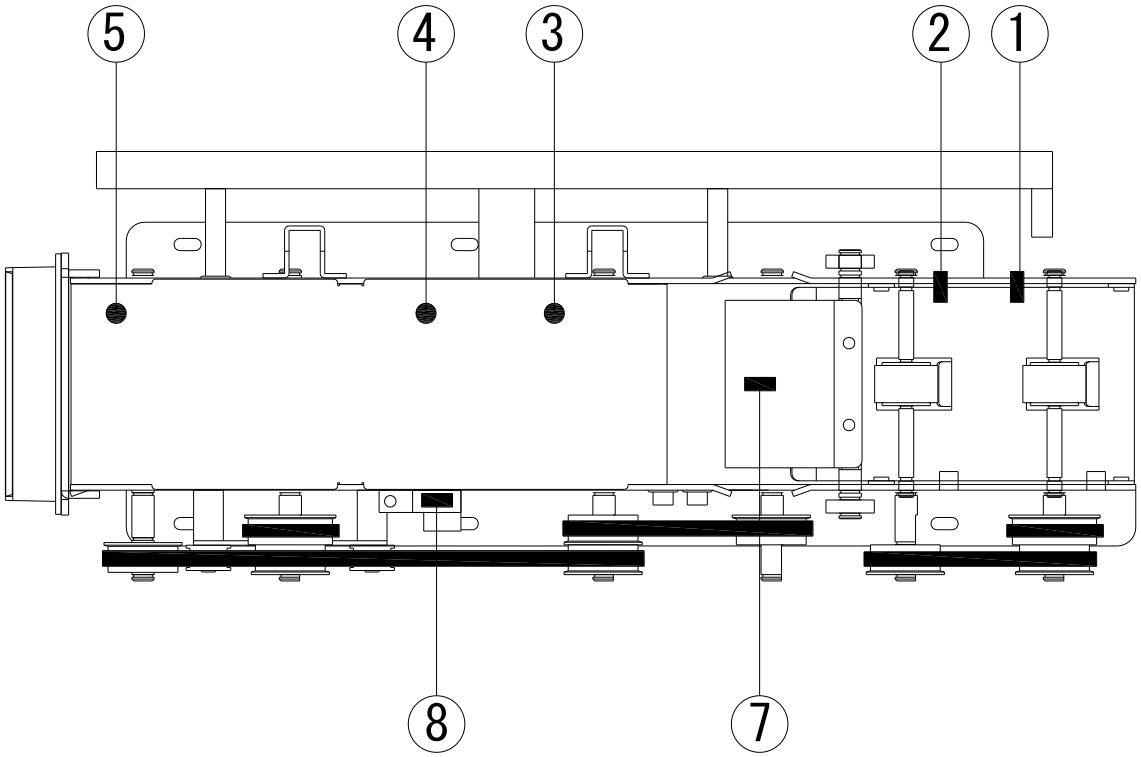

COMMAND DETAIL

♦ *Command List*

	Item	Cm0	Cm1	Cm2	Detail	Note
COMMON	STATUS	'C'	'1'	'1'	Get Model	
		'C'	'1'	'2'	Get Firmware Version	
		'C'	'1'	'6	Get Card Position Information	
		'C'	'4'	'2'	Software RESET for Main Board	
		'C'	'5'	'5'	Get All Sensor status	
	SETTING	'C'	'2'	'1'	Set RTC IC	
		'C'	'2'	'4'	Set Retry Count	
		'C'	'2'	'5'	Set Buzz On/Off Cont.	
	MOVING	'C'	'3'	'2'	Card Move To …	
		'C'	'3'	'7'	Card Eject in hold mode	Forward
		'C'	'3'	'4'	Card Capture	Backward
		'C'	'3'	'A'	Card Rear Drop	Backward
MAGNETIC Ticket	MAGNETIC READ / WRITE	'M'	'3'	'1'	Magnetic Card Read	
		'M'	'3'	'3'	Magnetic Card Write	With Verify
		'M'	'3'	'D'	Magnetic Card Read data on 3track for binary format	Optional
		'M'	'3'	'E'	Magnetic Card Write on 3 track for binary format	Optional
		'M'	'3'	'5'	Magnetic Card All Track Read	
	Cleaning	'M'	'5'	'1'	MSRW Header Cleaning	
PRINTER	Ticket Print	'P'	'2'	'3'	Card Print.	
	Cleaning	'P'	'3'	'2'	Thermal Header Cleaning	
	SETTING	'P'	'3'	'7'	Setting the Bar-Code Data to the Sram.	

♦ *Common*

These are the command set that all the TAM Series use. These commands include the terminal setting and the card movement related commands.

The 'STATUS' commands provide the function to check the current terminal status and the errors occurred during the command execution.

The 'SETTING' commands consist of commands for setting the terminal and these commands is easy to use because the same command can use for both setting and checking the terminal.

The 'MOVE' commands consist of commands used commonly like the card eject and capture command.

1 STATUS / SETTING

1.1 “C11” : It is to check out Model number of TAM.

☞ Command Format

SOH	Null	Length	STX	“C11”	ETX	Bcc

☞ Positive Response Format

SOH	Null	Length	STX	“C11”	GOOD	0x01	DATA	ETX	Bcc

☞ Negative Response Format

SOH	Null	Length	STX	“C11”	E-Code	0x00	ETX	Bcc

☞ Response Data Structure

Model No
30 Byte (ASCII)

1.2 “C12” : It is to check out Firmware Version of TAM

☞ Command Format

SOH	Null	Length	STX	“C12”	ETX	Bcc

☞ Positive Response Format

SOH	Null	Length	STX	“C12”	GOOD	0x01	DATA	ETX	Bcc

☞ Negative Response Format

SOH	Null	Length	STX	“C12”	E-Code	0x00	ETX	Bcc

☞ Response Data Structure

VERSION
30 Byte (ASCII)

1.3 “C16” : It is to check out current card position of TAM

☞ Command Format

SOH	Null	Length	STX	“C16”	ETX	Bcc

☞ Positive Response Format

SOH	Null	Length	STX	“C16”	GOOD	0x01	DATA	ETX	Bcc

☞ Negative Response Format

SOH	Null	Length	STX	“C16”	E-Code	0x00	ETX	Bcc

☞ Response Data Structure

Card Position
1 Byte(Hex)

<Card Position> Refer to page 22.

Sensor	Value
SEN_1	0x01
SEN_2	0x02
SEN_3	0x04
SEN_4	0x08
SEN_5	0x10
SEN_6	0x20

1.4 “C42” : Software RESET for Main Board.

☞ Command Format.

SOH	Null	Length	STX	“C42”	ETX	Bcc

☞ Positive Response Format.

SOH	Null	Length	STX	“C42”	GOOD	0x01	ETX	Bcc

☞ Negative Response Format.

SOH	Null	Length	STX	“C42”	E-Code	0x00	ETX	Bcc

☞ Note

This “C42” Software RESET command is effective for TAM-1XXX MAIN BOARD only.

Card Dispenser and Card Reader is not reset.

With this software RESET, all the data set at TAM-1XXX return to DEFAULT value.

After “RESET”, minimum 3 seconds is required before running to get secure operation.

1.5 “C55” : It is to check out all the sensors of TAM

☞ Command Format

SOH	Null	Length	STX	“C55”	ETX	Bcc

☞ Positive Response Format

SOH	Null	Length	STX	“C55”	GOOD	0x01	DATA	ETX	Bcc

☞ Negative Response Format

SOH	Null	Length	STX	“C55”	E-Code	0x00	ETX	Bcc

☞ Response Data Structure

Status of all the sensors		
First Byte(Fixed) 0x00	Second Byte(Fixed) 0x00	Third Byte(Hex)

< Third Byte> Refer to page 20.

Sensor	Value
SEN_1	0x01
SEN_2	0x02
SEN_3	0x04
SEN_4	0x08
SEN_5	0x10
SEN_6	0x20
SEN_7	0x40
SEN_8	0x80

2 SETTING

2.1 “C21” : It is to set or check ‘RTC IC’.

☞ Command Format

SOH	Null	Length	STX	“C21”	DATA	ETX	Bcc

☞ Command Data Structure

Fixed ◄► Variable (Mode = Setting Mode)

Mode	Data
1Byte (Hex)	7Byte (BCD)

High-Year	Low-Year	Month	Day	Hour	Minute	Second
0x20	0x00–0x99	0x01–0x12	0x01–0x31	0x00–0x23	0x00–0x59	0x00–0x59
1Byte	1Byte	1Byte	1Byte	1Byte	1Byte	1Byte

☞ Positive Response Format

SOH	Null	Length	STX	“C21”	GOOD	0x01	DATA	ETX	Bcc

☞ Negative Response Format

SOH	Null	Length	STX	“C21”	E-Code	0x00	ETX	Bcc

☞ Response Data Structure

Variable (Mode = Check Mode) ◄►

High-Year	Low-Year	Month	Day	Hour	Minute	Second
0x20	0x00–0x99	0x01–0x12	0x01–0x31	0x00–0x23	0x00–0x59	0x00–0x59
1Byte	1Byte	1Byte	1Byte	1Byte	1Byte	1Byte
BCD						

☞ Data Variable

<Mode>

Code	Mode	Detail
0x01	‘Setting Mode’	Set ‘RTC IC’
0x02	‘Check Mode’	Check ‘RTC IC’

☞ Note

‘Day’ is changeable due to the value of ‘Month’.

2.2 “C24” : It is to set or to check ‘Retry Count’.

☞ Command Format

SOH	Null	Length	STX	“C24”	DATA	ETX	Bcc

☞ Command Data Structure

Fixed	Variable (Mode = Setting Mode)
Mode	Retry Count
1Byte (Hex)	1Byte (Hex)

☞ Positive Response Format

SOH	Null	Length	STX	“C24”	GOOD	0x01	DATA	ETX	Bcc

☞ Negative Response Format

SOH	Null	Length	STX	“C24”	E-Code	0x00	ETX	Bcc

☞ Response Data Structure

Variable (Mode = Check Mode)
Retry Count
1Byte (Hex)

☞ Data Variable

<Mode>

Code	Mode	Detail
0x01	‘Setting Mode’	Set ‘Retry Count’
0x02	‘Check Mode’	Check ‘Retry Count’

<Retry Count>

Code	Setting	Detail	Note
0x00	NON	Do not retry	
0x01	Once	Execute the instruction again.	
0x02	Twice	Retry it twice	
0x03	Three times	Retry it three times	Default

2.3 “C25” : It is to set or check ‘Buzz Control’.

☞ Command Format

SOH	Null	Length	STX	“C25”	DATA	ETX	Bcc

☞ Command Data Structure

Fixed	Variable (Mode = Setting Mode)
Mode	Buzz Status
1Byte (Hex)	1Byte (Hex)

☞ Positive Response Format

SOH	Null	Length	STX	“C25”	GOOD	0x01	DATA	ETX	Bcc

☞ Negative Response Format

SOH	Null	Length	STX	“C25”	E-Code	0x00	ETX	Bcc

☞ Response Data Structure

Variable (Mode = Check Mode)
Buzz Status
1Byte (Hex)

☞ Data Variable

<Mode>

Code	Mode	Detail
0x01	‘Setting Mode’	Set ‘Buzz Control’
0x02	‘Check Mode’	Check ‘Buzz Control’

<Buzz Status>

Code	Setting	Detail	Note
0x01	Buzz Off	Buzz Off	
0x02	Buzz On	Buzz On	Default

3 MOVE

3.1 “C32” : It is take card to Card Reader / Writer Module or Printer Module.

☞ Command Format

SOH	Null	Length	STX	“C32”	DATA	ETX	Bcc

☞ Command Data Structure

Module
1Byte (Hex)

☞ Positive Response Format

SOH	Null	Length	STX	“C32”	GOOD	0x01	DATA	ETX	Bcc

☞ Negative Response Format

SOH	Null	Length	STX	“C32”	E-Code	0x00	ETX	Bcc

☞ Data Variable

<Module>

Code	Setting	Detail
0x01	MSRW	Transport the card to MSRW Module
0x02	RFU	
0x03	RFU	
0x05	Printer	Transport the card to Printer Module
0x06	RFU	
0x07	Rear	Transport the card to Rear of unit for parking function

3.2 “C34” : It takes card to Bin Box (Capture)

☞ Command Format

SOH	Null	Length	STX	“C34”	ETX	Bcc

☞ Positive Response Format

SOH	Null	Length	STX	“C34”	GOOD	0x01	ETX	Bcc

☞ Negative Response Format

SOH	Null	Length	STX	“C34”	E-Code	0x00	ETX	Bcc

3.3 “C37” : Dispense the card to front and hold it at the exit roller of the unit.

☞ Command Format

SOH	Null	Length	STX	“C37”	ETX	Bcc

☞ Positive Response Format

SOH	Null	Length	STX	“C37”	GOOD	0x01	ETX	Bcc

☞ Negative Response Format

SOH	Null	Length	STX	“C37”	E-Code	0x00	ETX	Bcc

3.3 “C3A” : Drop the card to rear exit.

☞ Command Format

SOH	Null	Length	STX	“C3A”	ETX	Bcc

☞ Positive Response Format

SOH	Null	Length	STX	“C3A”	GOOD	0x01	ETX	Bcc

☞ Negative Response Format

SOH	Null	Length	STX	“C3A”	E-Code	0x00	ETX	Bcc

♦ *MAGNETIC Ticket*

This section describes the commands that can use at the magnetic Ticket.

Track	Available Character Set	Maximum characters	REMARKS
Track #1	Character, Numbers	76	Except for the special character
Track #2	Numbers	36	
Track #3	Number	104	

Basic Magnetic Ticket Operations:

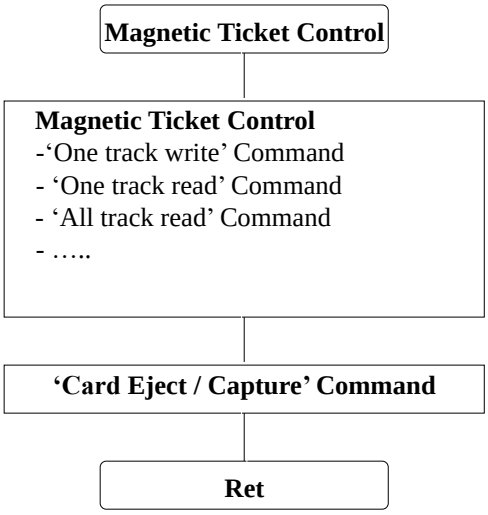

Magnetic Card Operations in the terminal

1 MAGNETIC READ / WRITE

1.1 "M31" : It is to read data on track chosen.

☞ Command Format

SOH	Null	Length	STX	"M31"	DATA	ETX	Bcc

☞ Command Data Structure

Track (1Byte)

☞ Positive Response Format

SOH	Null	Length	STX	"M31"	GOOD	0x01	DATA	ETX	Bcc

☞ Negative Response Format

SOH	Null	Length	STX	"M31"	E-Code	0x00	ETX	Bcc

☞ Response Data Structure

Read Data (ASCII Code)

☞ Data Variable

<Track>

Code	Setting	Detail
0x01	Track 1	Read data on Track 1
0x02	Track 2	Read data on Track 2
0x03	Track 3	Read data on Track 3
0x05	RFU	

1.2 "M33" : It is to write data on track chosen.

☞ Command Format

SOH	Null	Length	STX	"M33"	DATA	ETX	Bcc

☞ Command Data Structure

Track	Write Data
1Byte (Hex)	(ASCII Code)

☞ Positive Response Format

SOH	Null	Length	STX	"M33"	GOOD	0x01	ETX	Bcc

☞ Negative Response Format

SOH	Null	Length	STX	"M33"	E-Code	0x00	ETX	Bcc

☞ Data Variable

<Track>

Code	Setting	Detail
0x01	Track 1	Write data to Track 1
0x02	Track 2	Write data to Track 2
0x03	Track 3	Write data to Track 3
0x05	RFU	

☞ Note

This command has the 'Verify' feature.

4.5 “M3D” : It is to read data on 3track for binary format.

☞ Command Format

SOH	Null	Length	STX	“M3D”	ETX	Bcc

☞ Positive Response Format

SOH	Null	Length	STX	“M3D”	GOOD	0x01	DATA	ETX	Bcc

☞ Negative Response Format

SOH	Null	Length	STX	“M3D”	E-Code	0x00	ETX	Bcc

☞ Response Data Structure

DATA : 1 – 166 Byte ASCII String

☞ Note

The TAM-1000 can read binary data, but the data is not precisely without start bit.

You must analyze response data correctly.

4.6 “M3E” : It is to write data on 3track for binary format.

☞ Command Format

SOH	Null	Length	STX	“M3E”	DATA	ETX	Bcc

☞ Command Data Structure

Write Data
DATA : 1 – 146 Byte (0 ~9, A~F) ASCII String

☞ Positive Response Format

SOH	Null	Length	STX	“M3E”	GOOD	0x01	ETX	Bcc

☞ Negative Response Format

SOH	Null	Length	STX	“M3E”	E-Code	0x00	ETX	Bcc

☞ ex)

ASCII	BINARY
0(0x30)	0000
1(0x31)	0001
-	-
9(0x39)	1001
A(0x40)	1010
-	-
E(0x45)	1110
F(0x46)	1111

If you want to be binary value to 0001 1110 0101 1010.

The write data are set to ‘1’ ’E’ ’5’ ‘A’.

1.4 “M35” : It is to read data from all three tracks.

☞ Command Format

SOH	Null	Length	STX	“M35”	ETX	Bcc

☞ Positive Response Format

SOH	Null	Length	STX	“M35”	GOOD	0x01	DATA	ETX	Bcc

☞ Negative Response Format

SOH	Null	Length	STX	“M35”	E-Code	0x00	ETX	Bcc

☞ Response Data Structure

0x01	Track1 Data	0x02	Track2 Data	0x03	Track3 Data
1Byte (Hex)	(ASCII)	1Byte (Hex)	(ASCII)	1Byte (Hex)	(ASCII)

2 CLEANING

2.1 “M51” : It is to clean Magnetic Head mounted inside MSRW.

☞ Command Format

SOH	Null	Length	STX	“M51”	ETX	Bcc

☞ Positive Response Format

SOH	Null	Length	STX	“M51”	GOOD	0x01	ETX	Bcc

☞ Negative Response Format

SOH	Null	Length	STX	“M51”	E-Code	0x00	ETX	Bcc

♦ *THERMAL PRINT*

This section describes the commands that can use at the printer operations

Basic Printer Operations:

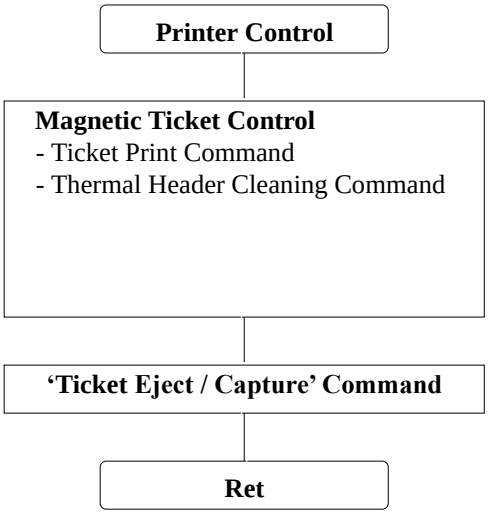

Printer Operations in the terminal

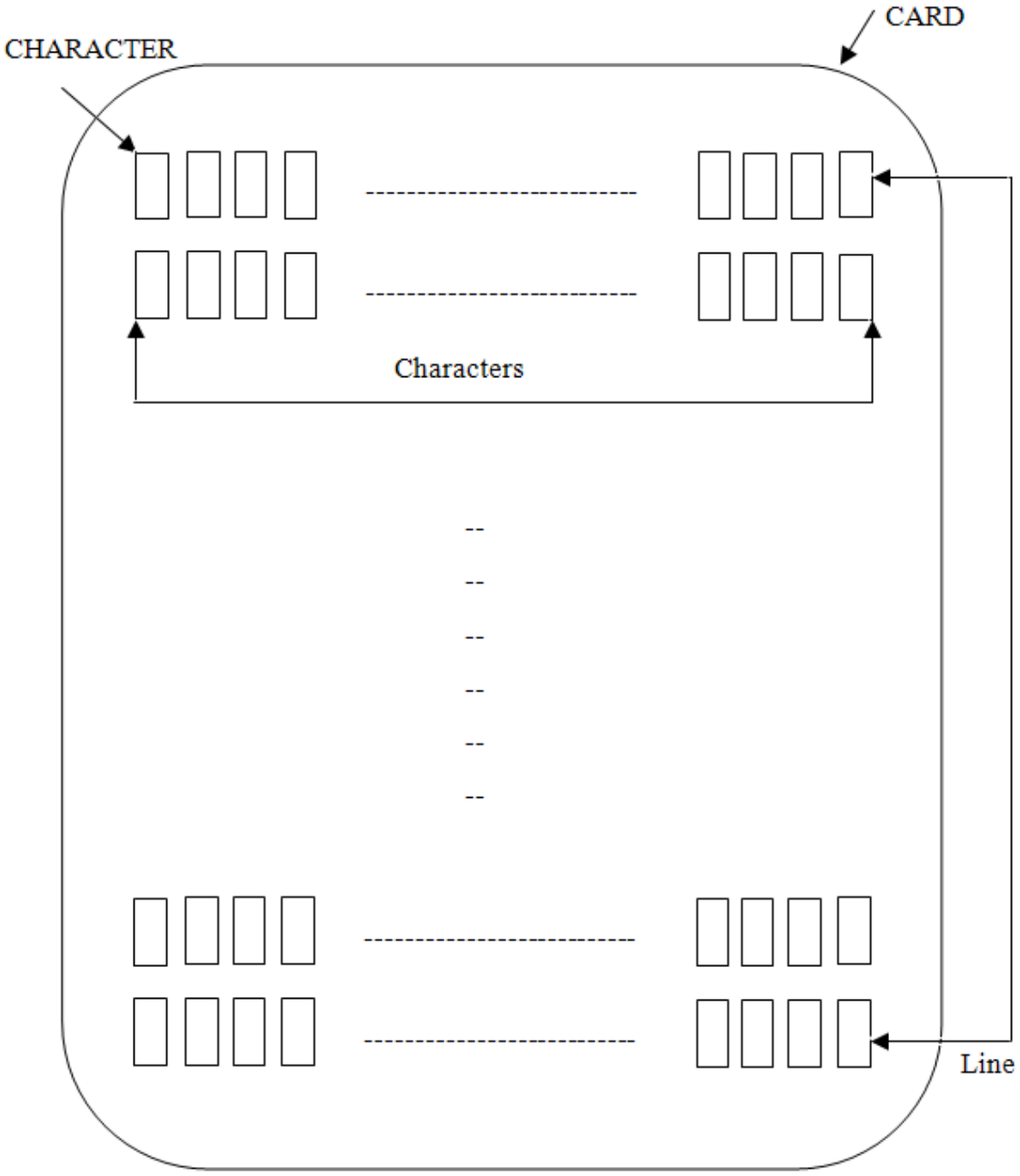
CARD
CHARACTER
Characters
Line

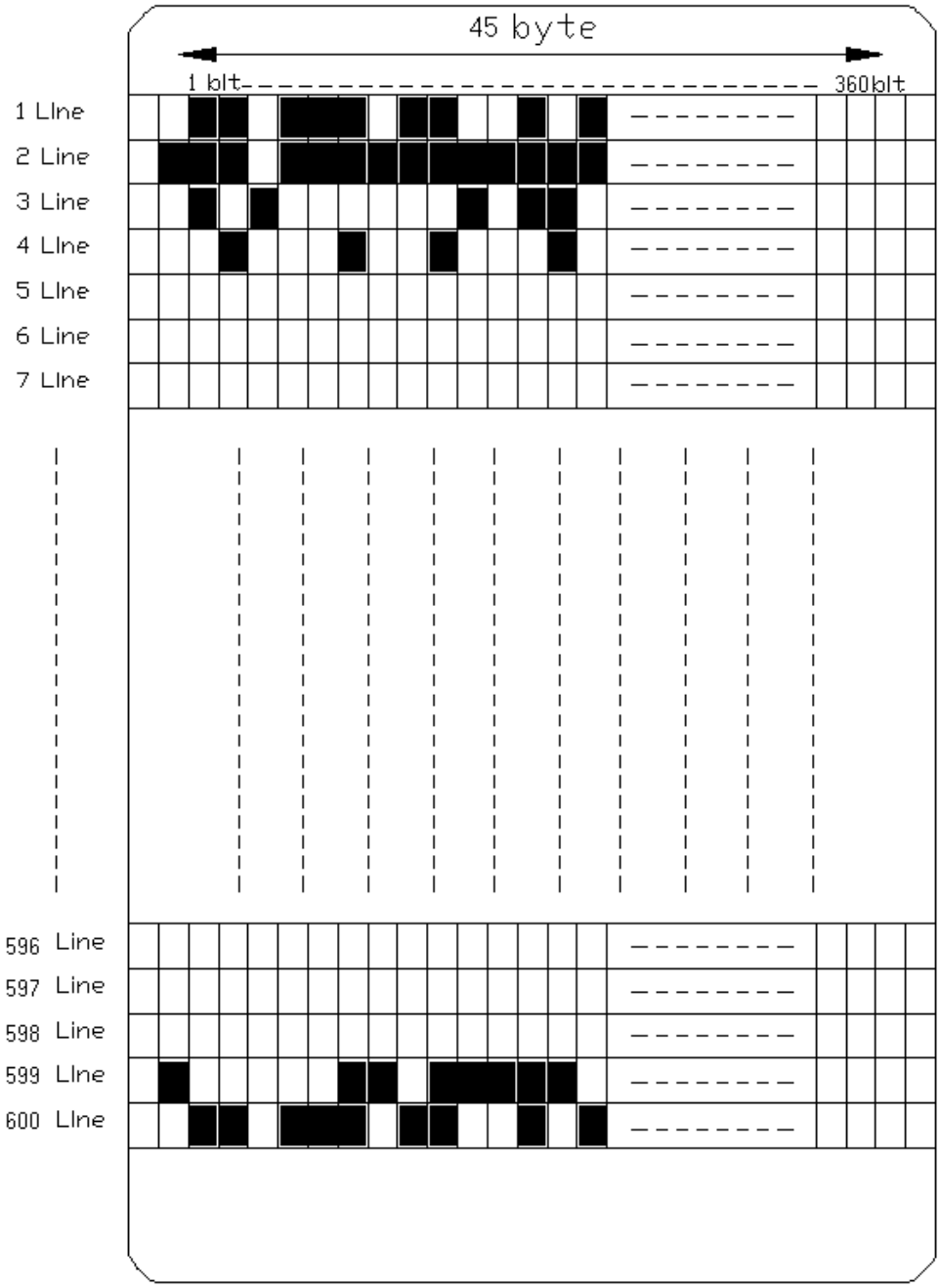
45 byte
1 bit
360bit
1 Line
2 Line
3 Line
4 Line
5 Line
6 Line
7 Line
596 Line
597 Line
598 Line
599 Line
600 Line

♂(ASCII CODE 0x20) : 1character fills blank.

♪(ASCII CODE 0x0D): Next Line moving.

Ex1)

INPUT DATA: ABCD♂EFGHI

Ticket PRINT:

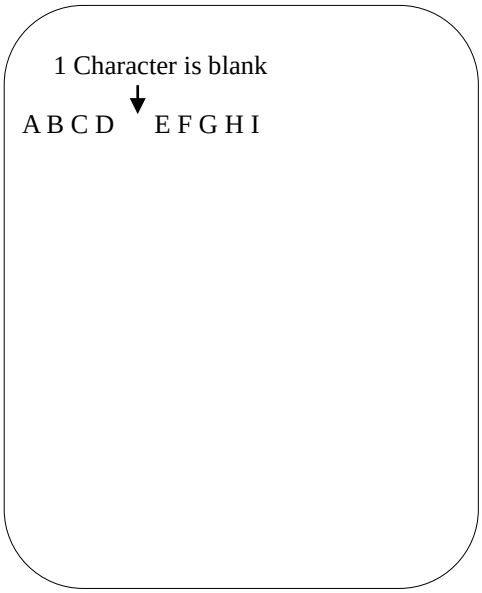

Ex2)

INPUT DATA: ABCD♪EFGHI

Ticket PRINT:

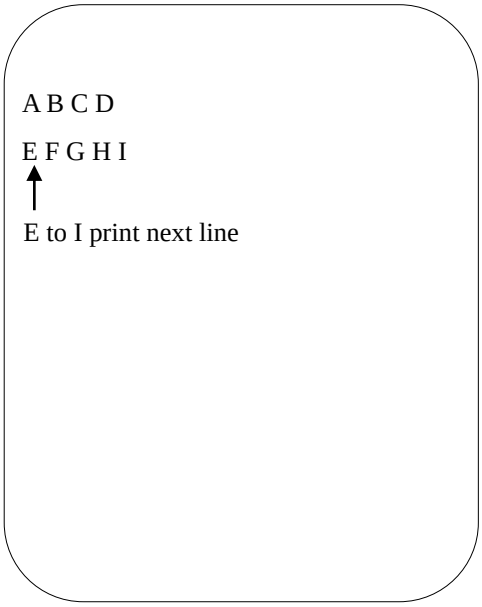

1. THERMAL PRINTER

1.1 "P23" : Moves card to Stand-by position, and start printing .

☞ Command Format

SOH	Null	Length	STX	"P23"	DATA	ETX	Bcc

☞ Command Data Structure

Optional Flag	Ticket Line Number	Data to be printed on Ticket surface. (Variable length)
1Byte (HEX)	2Byte (ASCII Number: "01"~"99")	ASCII CODE 0x21(!) to 0x7E(~) (200Byte Max)

☞ Positive Response Format

SOH	Null	Length	STX	"P23"	GOOD	'1'	ETX	Bcc

☞ Negative Response Format

SOH	Null	Length	STX	"P23"	E-Code	'0'	ETX	Bcc

☞ Note

♂(ASCII CODE 0x20) : 1character fills blank.

♪(ASCII CODE 0x0D): Next Line moving.

☞ Data Variable

< Optional Flag >

Bits	Setting	Detail
7 6 5	RFU	-
4 3	Rotation	00: 0° rotation 01: 90° rotation 10: 180° rotation 11: 270° rotation
2 1	Font Type	00: Font height is 24 01: Font height is 32 10: Font height is 48 11: RFU
0	Bar Code	Bar Code in the SRAM memory is included, If this bit is set to 1.

1.2 "P32" : It is to clean Thermal Printer Head.

☞ Command Format

SOH	Null	Length	STX	"P32"	ETX	Bcc

☞ Positive Response Format

SOH	Null	Length	STX	"P32"	GOOD	'1'	ETX	Bcc

☞ Negative Response Format

SOH	Null	Length	STX	"P32"	E-Code	'0'	ETX	Bcc

1.3 “P37” : It sets Bar Code options into the SRAM buffer.

***To print this Bar Code data, use the “P23” command.**

☞ Command Format

SOH	Null	Length	STX	“P37”	DATA	ETX	Bcc

☞ Command Data Structure

Fixed byte				
X Point	Y Point	Font Select	Rotation	Bar-Code Scale
2byte(Hex) Decimal : 0~360 Hex: 0x00~0x168	2byte(Hex) Decimal : 0~600 Hex: 0x00~0x258	1byte(Hex) **0x01: Code 128** 0x02: RFU 0x03: RFU 0x04: RFU	1byte(Hex) 0x01: 0° rotation 0x02: 90° rotation 0x03: 180° rotation 0x04: 270° rotation	1byte(Hex) 0x01: One bar is 0.242mm 0x02: One bar is 0.363mm

Fixed byte		**Variable Byte**
Bar Code Height	Bar Code Text On/Off	Bar-Code Data to print
2byte(Hex) Decimal : 0~500 Hex: 0x00~0x1F4	1byte(Hex) 0x00: Off the BarCode Text. 0x01:On the BarCode Text.	Max: 23 byte(ASCII)

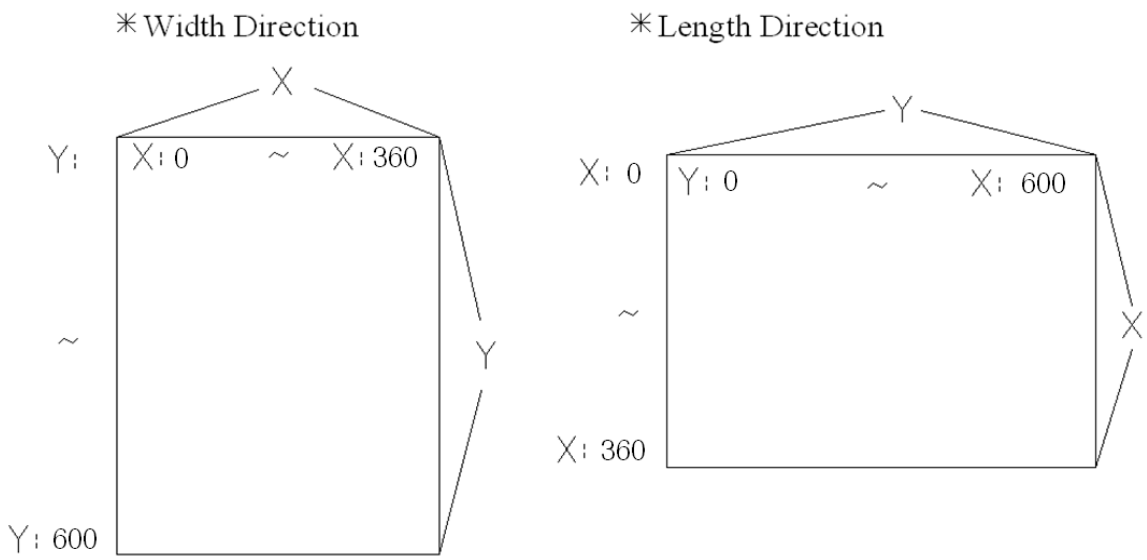

☞ Positive Response Format

SOH	Null	Length	STX	“P37”	GOOD	‘1’	ETX	Bcc

☞ Negative Response Format

SOH	Null	Length	STX	“P37”	E-Code	‘0’	ETX	Bcc

ERROR DETAIL

<GOOD>

Code : 0x0000

Description: Normal Execution

Procedures: None

<NOT_DEFINE_COMMAND>

Code : 0x2001

Description : Using the command that does not defined in this model.

Action : Use the valid command in this model.

<NOT_USE_COMMAND>

Code : 0x2002

Description : Not available command in this model.

Action : Use the valid command in this model.

<COMM_FRAME_ERROR>

Code : 0x2003

Description : Sending the command that has the invalid communication frame.

Action : Check the data format and the corresponding module specification.

<CARD_JAM>

Code : 0x2004

Description : When the card is jammed.

Action : Remove the jammed card.

<NO_CARD>

Code : 0x2005

Description : No cards.

Action : Insert the card.

<CARD_PRESENT>

Code : 0x2006

Description : When the card exists already in the terminal.

Action : Eject the card.

<BUSY>

Code : 0x2007

Description : When the terminal is running or busy.

Action : Wait until the previous operation is completed.

<RTC_ERROR>

Code : 0x2008

Description : When the RTC chip is broken.

Action : Replace the board.

<TWO_CARD_ERROR>

Code : 0x2009

Description : When more than one ticket is presented in the feeder part.

Action : Remove one card.

<MSRW_ERROR>

Code : 0x2200

Description : The MS Reader/Writer that cannot use in this model.

Action : Change the MS Reader/Writer.

<MSRW_WRITE_ERROR>

Code : 0x2202

Description : Error when the MS Reader/Writer is writing on the card.

Action : Clean the header and check the card.

<MSRW_READ_ERROR>

Code : 0x2203

Description : Error when the MS Reader/Writer is reading on the card.

Action : Clean the header and check the card.

<MSRW_READ_ERROR>

Code : 0x2203

Description : Error when the MS Reader/Writer is reading on the card.

Action : Clean the header and check the card.

< MS BLANK ERROR >

Code : 0x2209

Description : No data on the magnetic card.

Action : Write data on the magnetic card.

< MSRW _INSTALL_ERROR>

Code : 0x2606

Description : MSRW module is not normally installed.

Action : Check and reinstall the MSRW module normally.

<CAP_ERROR>

Code : 0x2211

Description : Error when the Cap is opened.

Action : Close the Cap..

<PRINT_ERROR>

Code : 0x2600

Description : Unavailable PRINTER module.

Action : Change the PRINTER MODULE

<SHUTTER_OPEN_ERROR>

Code : 0x2602

Description : THERMAL SHUTTER OPEN ERROR.

Action : Check the Shutter Sensor or Motor.

<SHUTTER_CLOSE_ERROR>

Code : 0x2603

Description : THERMAL SHUTTER CLOSE ERROR.

Action : Check the Shutter Sensor or Motor.

<THERMAL_LINE_OVER_ERROR>

Code : 0x2604

Description : Too big the chosen value.

Action : Check the Font size or setting value.

< THERMAL _PRINTER_INSTALL_ERROR>

Code : 0x2606

Description : Printer module is not normally installed.

Action : Check and reinstall the printer normally.

Precautions

1. Make sure that the top of Printer and MS module are closed.
2. Check the communication line
   1) Communication Port, Baud, Parity, and Data Bit, etc.